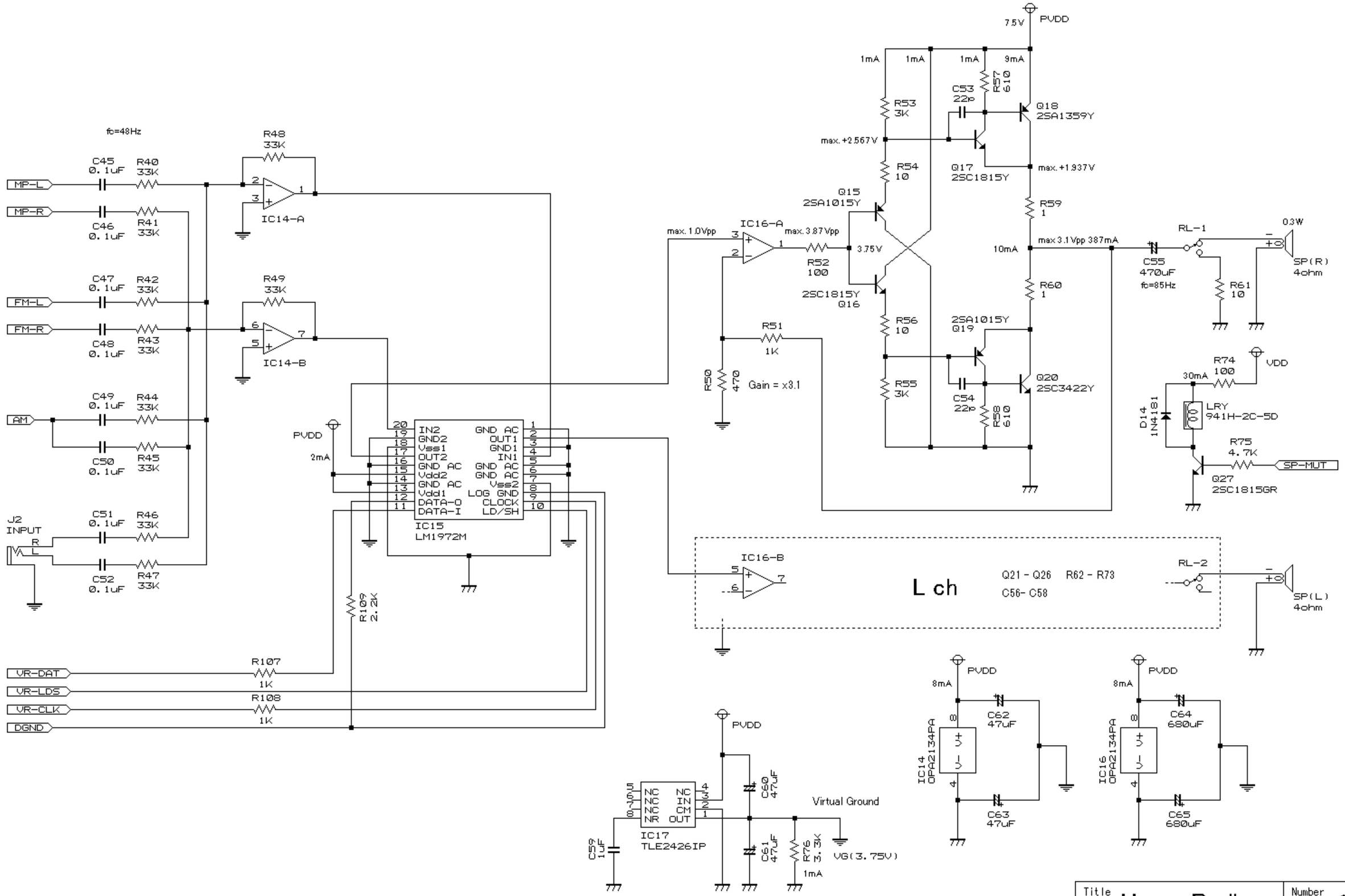

Title	Number
HoneyRadio	2
Mr. Honey	