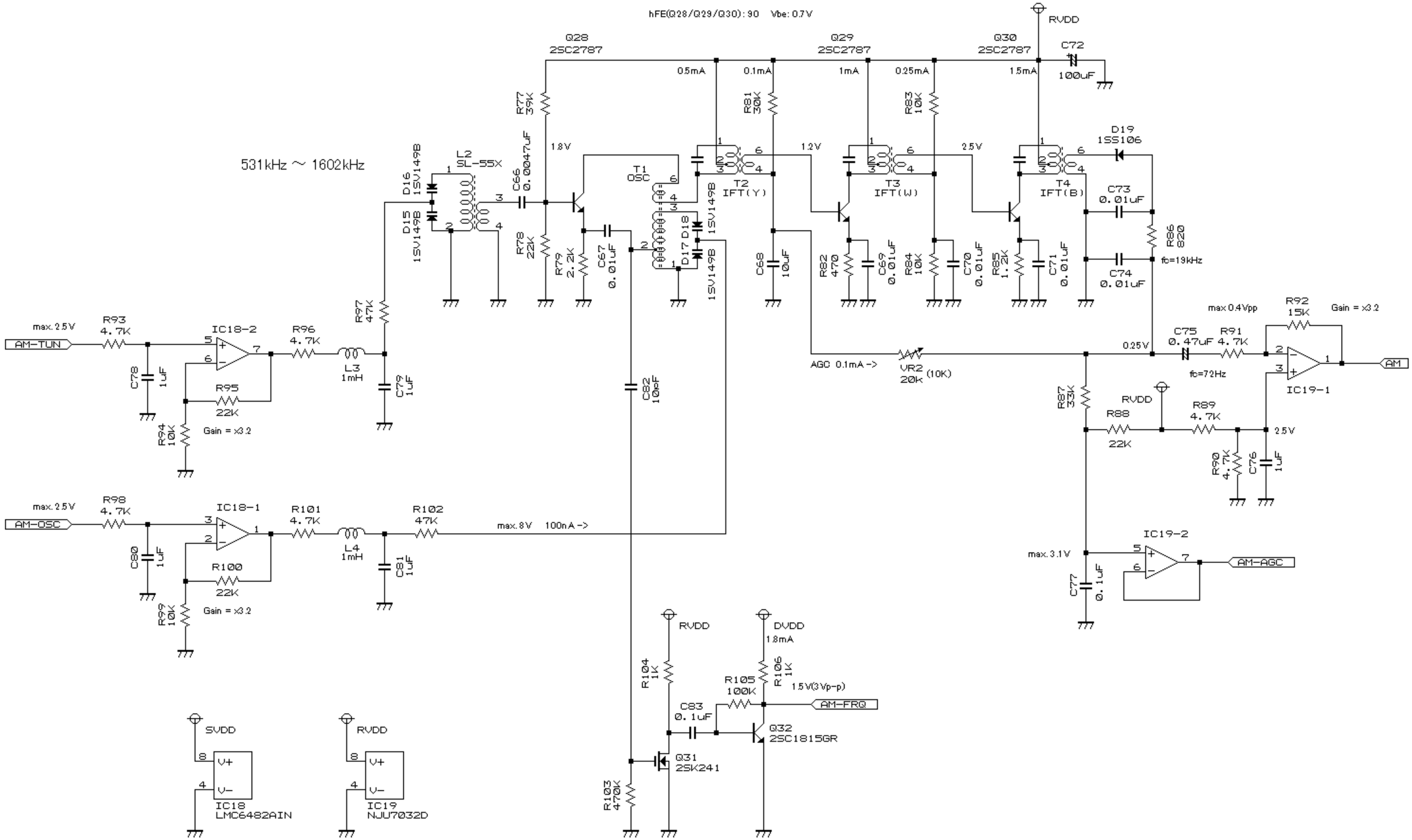

Title	Number
HoneyRadio	3
Mr. Honey	